June 2023

Slam-Shut Valve

CONTENTS

Figure 1. *Type OSE Slam-Shut Valve*

INTRODUCTION

Scope of the Manual

This manual provides installation, start-up, maintenance and parts ordering information for the Type OSE Slam-Shut Valve.

Information on other equipment used with this slam-shut valve is found in separate manuals.

Product Description

The Type OSE Slam-Shut Valve protects transmission and distribution networks or pipe lines supplying industries and commercial businesses.

It permits the gas flow to be cut off rapidly and totally in the case of under or over regulator pressure.

The Type OSE exists in DN 25 / NPS 1 to DN 150 / NPS 6. DN 200 / NPS 8 and DN 250 / NPS 10 are covered by the Type OSE LS.

The Type OSE consists of:

- A body with a removable orifice, enclosed by a bonnet
- A valve plug with integral bypass, tight shut by an O-ring
- A release relay type OS2 including:
  - A mechanism box (BM)
  - A safety manometric box (BMS) to be connected on the outlet side of the pressure regulator.

CHARACTERISTICS

Material

Body:	Steel
Bonnet:	Steel
Orifice:	Stainless steel
Valve plug:	Stainless steel
O-rings:	Nitrile

Connections

Inlet/Outlet:	CL150 RF - CL300 RF- CL600 RF PN 16B - PN 25B - PN 40B Other configurations available (contact factory)
Impulse (IS):	1/4 NPT threaded
Mechanism box vent (E):	1/4 NPT threaded
Impulse diameter:	Tube interior Ø 8/10 mm
Safety contact:	See Type OS2 Instruction Manual, D103683X012

Options

- Up to 25% Hydrogen blend (by volume) construction
- 100% Hydrogen construction

The **Type OSE** is in conformity with the Pressure Equipment Directive PED 2014/68/EU and is classified under category IV.

FISHER™

EMERSON™

Type OSE

Table 1. *Technical Characteristics of the Type OSE Slam-Shut Valve*

OPERATING PRESSURE		
Body, valve plug	PS	100 bar max
Associated BMS[1] according to size	PSD	10 to 100 bar
Maximum Inlet Pressure	P_{umax}	100 bar
Type	DS	Differential strength[2]
OPERATING TEMPERATURE[3]	TS	-20 / 60°C -30 / 71°C

SLAM-SHUT		
Sizes available	DN	25, 50, 80, 100, 150
Norm	EN 14382	
Operating class	A or B (see label, Figure 2)	

Accuracy	AG	2.5 – 5 (Piston)
Setpoint range	Wdu-Wdo	0.010 to 100 bar
Response time	ta	<1 s
Max Differential (valve closed)	ΔP max	100 bar
Max Differential (valve open)	ΔP max	See Table 2
Rearming	Manually after rectification of fault	
Position indicator	On mechanism box	

FLUID
Group 1 and 2 according to PED 2014/68/EU, 1st and 2nd family gas according to EN 437, or other gases (compressed air, nitrogen). **The gas must be noncorrosive, clean** (filtration on inlet side necessary) **and dry**

1. BMS: Safety manometric box
2. Differential strength (depending on BMS chosen)
3. Temperature depending on bolting material (see label)

Table 2. *Flow Coefficient, ΔP max, Relay travel*

DN	25	50	80	100	150	BYPASS
C_g	505	2110	4670	7860	14850	25
C_1	35	35	35	32	33	35
ΔP max (bar)	>25	>25	25	10	6	100
Relay travel (mm)	35	35	50	50	50	-

C50

LABELLING

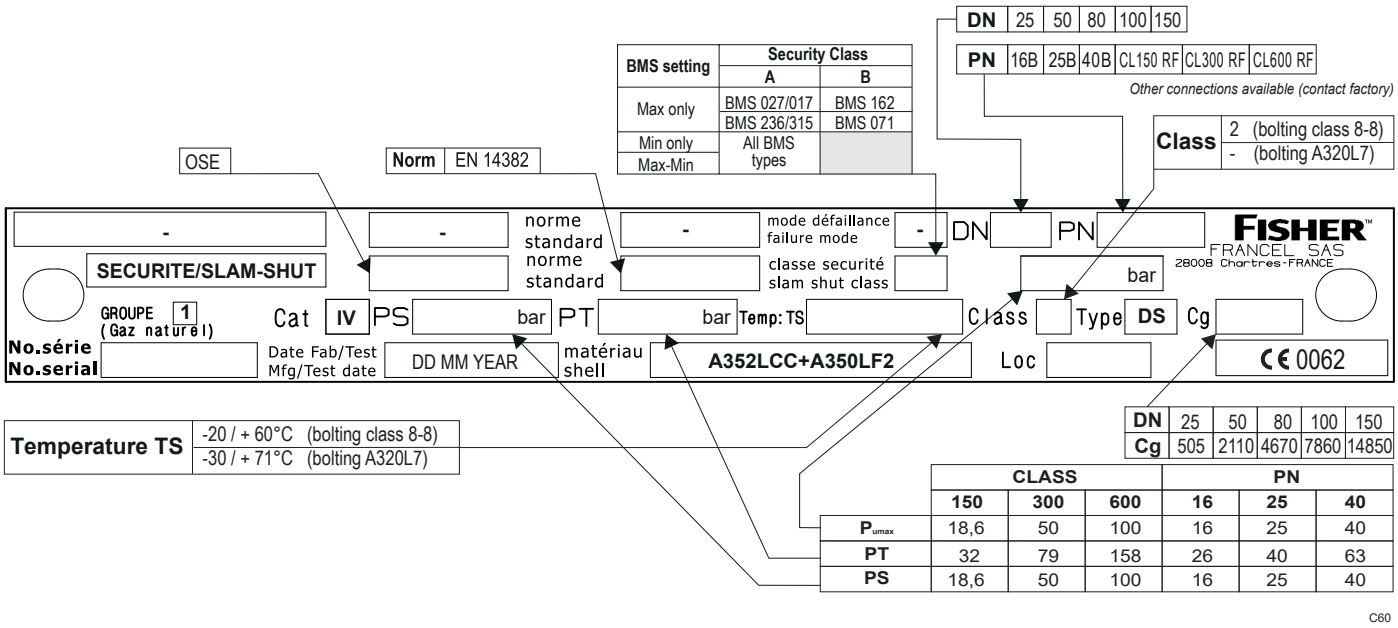

C60

Figure 2*. Label for Type OSE Slam-Shut Valve*

DIMENSIONS AND WEIGHTS

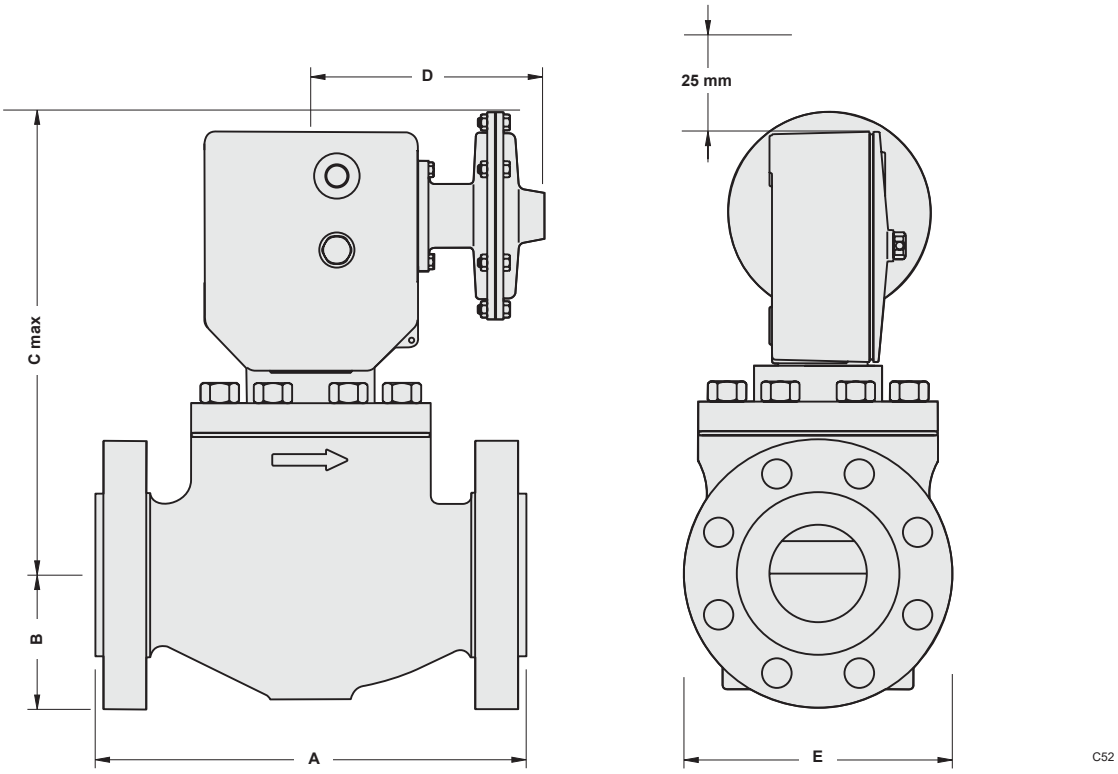

Figure 3. *Type OSE Slam-Shut Valve Dimensions*

Table 3. *Type OSE Slam-Shut Valve Dimensions and Weights*

DN	ANSI CLASS, RF	DIMENSIONS, mm					WEIGHT, kg
		A	B	C Max	D	E	
25	150	185	54	334	220	116	14
	300	197	62	334	220	124	16
	600	210	62	334	220	124	17
50	150	254	76	346	220	152	26
	300	267	83	346	220	165	29
	600	287	83	346	220	165	32
80	150	298	95	380	220	190	43
	300	318	105	380	220	210	48
	600	337	105	380	220	210	55
100	150	353	114	420	220	229	74
	300	368	127	420	220	154	82
	600	394	137	420	220	273	98
150	150	451	140	424	220	357	150
	300	473	159	424	220	357	166
	600	508	178	424	220	357	202

Other PN 16/25/40: contact factory

C53

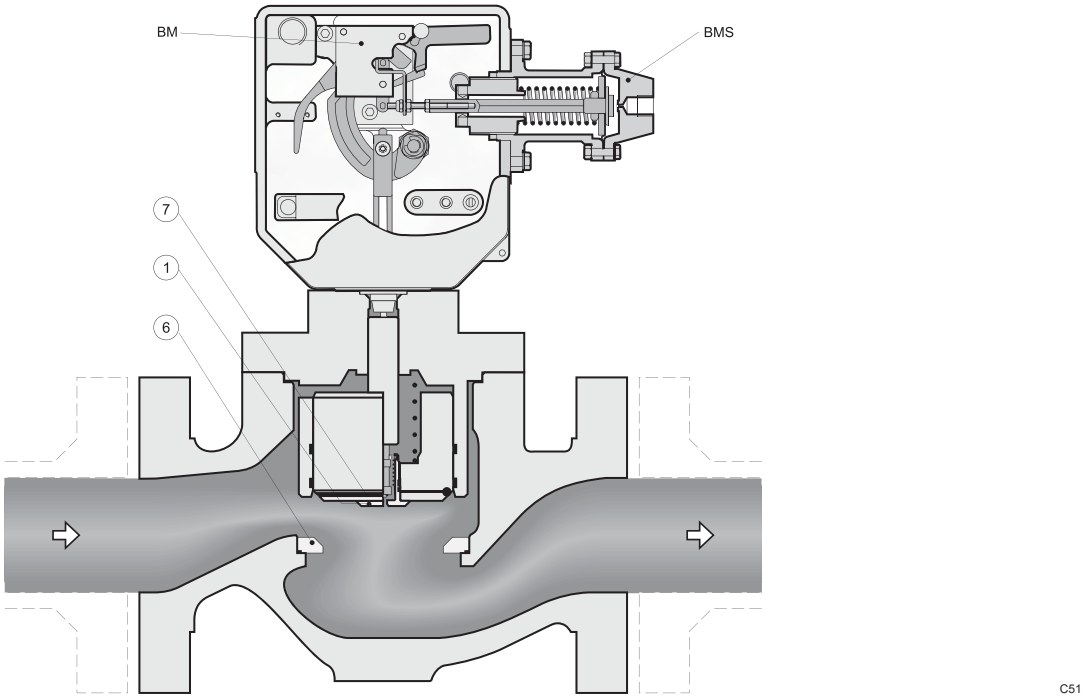

***Figure 4**. Type OSE LS - Principle of Operation*

OPERATION

The pressure of the zone to be protected (generally the pipe line on the outlet side of the pressure regulator and situated after the slam shut valve) activates the safety manometric box BMS.

If pressure rises above the release set point the release relay frees the valve plug (key 7).

Through the action of the weight of the valve plug, the closing spring and the fluid (attempting to close), the valve plug will seat into the orifice (key 6).

The gas flow is obstructed until the mechanism box is manually rearmed.

To reopen the valve plug an equal pressure balance on inlet and outlet sides is required.

The mechanism box is rearmed after opening the internal bypass (key 1).

Rearming and balancing are achieved at the same time.

INSTALLATION

WARNING

All interventions on the equipment should only be performed by qualified and trained personnel.

The slam shut valve is installed on the inlet side of the regulator, on the horizontal pipeline. The mechanism box should be situated on top (see above schematic) or on top for versions DN 25-50-80.

Installation according to EN12186 is recommended.

Install according to direction of the fluid flow (see arrow).

When assembling with adjacent elements, care must be taken not to create pressure force on the body and the assembling elements (bolts, O-rings, flanges) should be compatible with the geometry and working conditions of the equipment.

If the case arises a support must be used to avoid pressure force on the body (a support can be installed under the flanges).

Connect the safety manometric box (IS) to the impulse at 4D on the outlet pipe.

It is recommended to install an isolation valve (R1) and an atmospheric valve (R2), which can be useful for tripping and verifications.

No modification should be made to the structure of the equipment (drilling, grinding, soldering...).

Verify that the inlet side is protected by an appropriate device(s) to avoid exceeding the limits of utilization (PS, TS).

Verify that the limits of utilization correspond to the appropriate operating conditions.

Verify that the safety manometric box (BMS) and spring correspond to the appropriate operating conditions on the outlet side of the regulator.

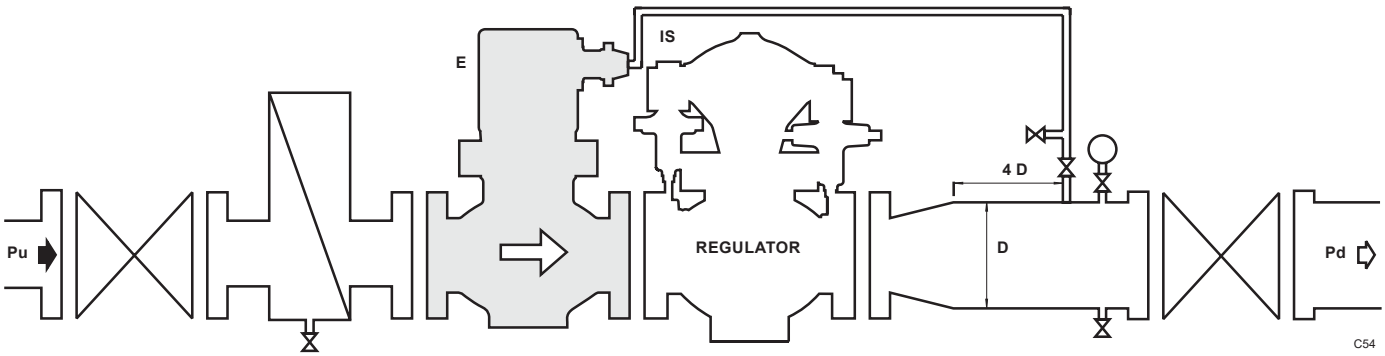

Safety contact: see Type OS2 Instruction Manual, D103683X012

Figure 5. *Type OSE Slam-Shut Valve Installation Schematic*

The equipment should not receive any type of shock, especially the release relay.

The user should verify or carry out a protection adapted to the environment.

Fire, seismic and lightening are not taken into consideration for standard regulators. If required, a special product selection and/ or specific calculations may be supplied according to specific requirements.

If the slam-shut is classified under operating class B the BMS diaphragm should be checked periodically.

COMMISSIONING

WARNING

All interventions on the equipment should only be performed by qualified and trained personnel.

Preliminary verifications

Start-up positions

- Inlet and outlet valves
  → Closed

Verify absence of pressure between inlet and outlet valves

- Slam-shut valve plug
  → Closed
- Impulse isolation valve
  → Closed
- Impulse atmospheric valve
  → Open

Setpoint Verification

Using the atmospheric valve, inject a pressure equal to the pressure foreseen for the regulator

- 1st release relay stage
  → Set (Stage 1)

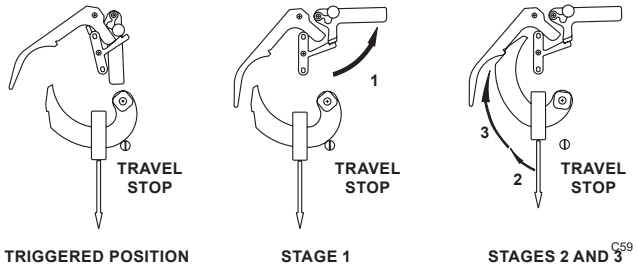

Figure 6. *Setpoint Verification*

- Slam shut valve
  → Open (Stages 2 and 3)
  → Progressively increase the pressure to reach tripping
  → Adjust setting if necessary (Type OS2 Instruction Manual, D103683X012)

Note the set point value on the equipment or mark it in a commissioning document.

Positions before Commissioning

- Impulse isolation valve
  → Open
- Impulse atmospheric valve
  → Closed
- Slam shut valve plug
  → Closed

The equipment is ready for commissioning.

Commissioning (max. only or max. and min.)

- Inlet valve
  → Open slowly
- Slam-shut bypass
  → Open slowly (stage 2)
- Regulator
  → Put into operation (see corresponding manual)
- 1st release relay stage
  → Set (Stage 1)
- Slam shut valve plug
  → Open (Stage 3)
- Outlet valve
  → Open slowly

The equipment is commissioned.

After checking and commissioning the release relay it is recommended to seal it

MAINTENANCE

Servicing Check

Recommended frequency:

- Twice yearly minimum

Verification:

- Tripping and tripping value
- Slam-shut tightness

Departure positions

- Inlet valve → Open
- Outlet valve → Open
- Slam-shut → Open
- Regulator → In operation

Inlet and outlet sides of regulator under pressure

Tripping verification

- Inlet valve → Closed
- Outlet valve → Closed
- Regulator Increase setpoint to reach tripping (without exceeding the outlet limits)

Disassembly

Recommended frequency:

- Every 4 to 6 years (or less depending on operating conditions)
- In the case of BMS 162 or 071, it is highly recommended to check the condition of the diaphragm once yearly

Verification:

- Condition of O-rings, diaphragm and lubrication

Replacement:

- O-rings, diaphragm

Tools:

- Spanners 10, 13, six-sided wrench 6
- Spanners According to DN size
- Emerson spanner ref. 197125 (bypass and pin disassembly)
- Valve plug closed
- Close inlet and outlet valves
- **Bleed off outlet pressure**
- **Bleed off inlet pressure**
- Unscrew impulse connection **IS**
- Remove BM cover (key 8)
- Unscrew fastening screw (key 9)
- Remove cap
- Remove BM
- Unscrew screws (key 10)
- Remove bonnet (key 11)
- Remove spring (rep. 12) and slam-shut valve plug (key 13)
- Unscrew bypass (key 1)
- Unscrew screws (key 14) (DN 100 and 150)

The removal of the orifice (not recommended) requires a special extraction tool.

Reassembly

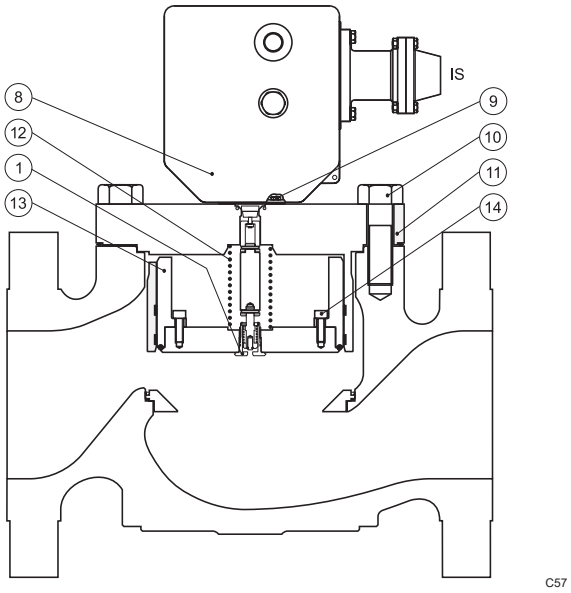

Figure 7. *Type OSE - Commissioning Schematic*

- Perform the above operations in reverse order (respect tightening torques)
- Replace O-rings at each disassembly
- The valve plug should be maintained in an upright position using the packing gland to facilitate it's removal.

- Precaution should be taken when removing or replacing the valve plug to avoid damaging the segments
- Lubricate screws before tightening
- Lubricate O-rings (silicone grease) except for the valve plug O-ring
- Lightly lubricate the stem (silicone grease)
- Lubricate the release relay mechanism (yoke and bolt) (molybdenum graphite grease)
- Lubricate the BMS spring (molybdenum graphite grease)

A special tool is required when installing a new orifice.

Table 4. *Torques (keys 9 and 14, Fig. 7)*

KEY	TORQUE, N•m
9	15
14	

C58c

Table 5. *Torques for Connecting Part Screw (key 10, Fig. 7)*

DN	DIMENSIONS	SPANNER, in.	TORQUE, N•m
25	9/16-12 x 13/4	13/16	110
50	1/2-13 x 11/2	3/4	110
80	5/8-11 x 13/4	15/16	175
100	3/4-10 x 21/4	1-1/8	260
150	1-8 x 23/4	1-1/2	510

C58a

Table 6. *Torques for Bypass (key 1. Fig. 7)*

DN	TORQUE, N•m
25	14
50	14
80	20
100	24
150	24

C58b

Table 7. *Troubleshooting for Type OSE Slam-Shut Valve*

SYMPTOM	CAUSE	ACTION
If the valve will not close	Operating fault	Check the release relay Check the valve plug or contact after-sales
If the valve closes	Operating correctly	Observe the evolution of the outlet pressure (check tightness)
If the outlet pressure in the slam shut is decreases	External leak	Locate and seal the leak or contact after-sales
If the outlet pressure in the slam shut is constant		Bleed off the outlet side of the regulator Observe the evolution of the outlet pressure (check tightness)
If the outlet pressure increases	Internal leak	Check the slam shut valve plug Check the orifice Check the bypass or contact after-sales

SPARE PARTS

Table 8. *Spare Parts for Type OSE Slam-Shut Valve*

KEY	DESCRIPTION	DN 25	DN 50	DN 80	DN 100	DN 150
1	Bypass	180977				
2	Valve plug O-ring	400257	400263	400258	400260	400261
3	Segments	401950	401951	401952	401953	401954
4	O-ring	400298	400295	400297	400296	19B0359X12
5	O-ring	400009	400024	400259	400045	400262
	Packing gland “Kit”	197395				
	Set of O-rings*	197447	197448	197449	197450	197451
	Spare parts kit**	197452	197453	197454	197455	197456
	Release Relay Type OS2	See Type OS2 Instruction Manual, D103683X012				

(*) Set of O-rings and segments including O-rings key 2, 3, 4, 5
(**) Spare-parts kit including set of O-rings, bypass (key 1) and bypass disassembly spanner

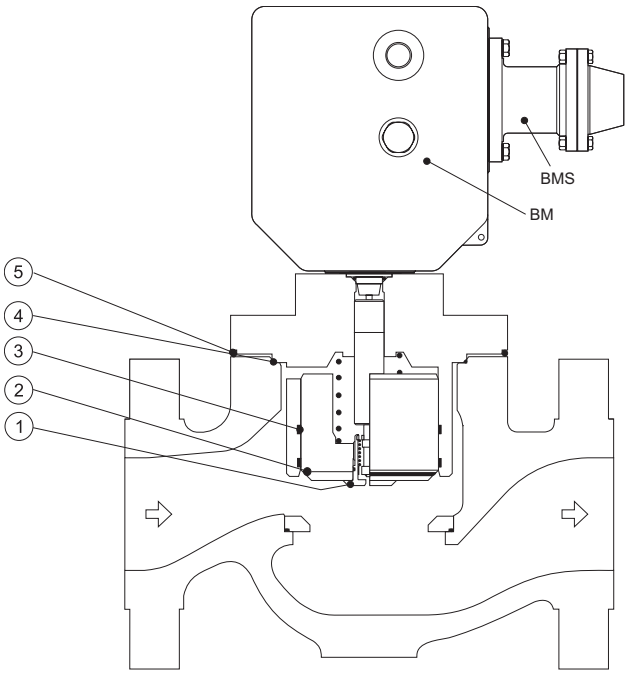

C56

Figure 8. *Type OSE Spare Parts*

Webadmin.Regulators@emerson.com
Fisher.com
Facebook.com/EmersonAutomationSolutions
LinkedIn.com/company/emerson-automation-solutions
Twitter.com/emr_automation

Emerson Automation Solutions

Americas
McKinney, Texas 75070 USA
T +1 800 558 5853
+1 972 548 3574

Europe
Bologna 40013, Italy
T +39 051 419 0611

Asia Pacific
Singapore 128461, Singapore
T +65 6777 8211

Middle East and Africa
Dubai, United Arab Emirates
T +971 4 811 8100

Francel SAS*, 3 Avenue Victor Hugo,CS 80125, Chartres 28008, France*
SIRET 552 068 637 00057 APE 2651B, N° TVA : FR84552068637, RCS Chartres B 552 068 637,
SAS capital 534 400 Euro